Bosnia and Herzegovina

Academic year 2024-2025.

International University of Sarajevo

SOLUTION REPORT

Implementation of Digital Logic Circuits for Control Systems on the Example of an Elevator

Course: Digital Design

Lecturer: Prof. Dr. Tarik Namas

Sarajevo, February 2025. **By: Ibrahim Čustović**

Table of contents

1. Introduction 4
1.2 What is elevator? 4
2. Invention of the elevator 5
2.1 History of this invention 5
3. Relays 7
3.1 Parts of relays 7
3.2 Types of relays 8
3.2.1 Based on Poles and Throw 8
3.2.2 Forms of relay 9
3.2.3 Based On Operation Principles 10
4. Elevator logic implemented by relays 13
4.1 Elevator control circuit 13
4.2 Key components 14
4.3 How does it work as a complete system 15
5. Simulating the operation of an elevator system with relays using digital logic 16
5.1 Request latching 16
5.2 Direction logic 17
5.3 Clearing logic 18
5.4 Motor and speed control 19
6. Conclusion 20
References 21

Image 1: Elevator 4
Image 2: Elisha Otis's elevator patent drawing 5
Image 3: Relay 6
Image 4: Construction of a relay 7
Image 5: Single pole single throw delay 8
Image 6: Single pole double throw 8
Image 7: Double pole single throw 9
Image 8: Double pole double throw 9
Image 9: "Form A" relay 9
Image 10: "Form B" relay 10
Image 11: "Form C" relay 10
Image 12: Electromechanical relay 10
Image 13: Solid state relay 11
Image 14: Hybrid relay 11
Image 15: Elevator - implementation using relays - part1 13
Image 16: Elevator implementation using relays - part2 14

Image 17: Request latching 16
Image 18: Direction logic 17
Image 19: Request clearing logic 18
Image 20: Motor and speed control 19

1. Introduction

We were offered two topics for this project, an elevator and a traffic light. I chose the elevator because it seemed like a more interesting topic, since I had researched the traffic light a little while choosing a topic for the Logisim project, while I was completely unfamiliar with the operation of the elevator until this moment. Although both of these topics are very well researched and popular when explaining the operation of microprocessors, I think that more material for work is available on the topic of the elevator, so due to the short deadline I decided to cover that topic.

The task was to explain how the logic circuit mimicking relays would work on the example of a 4-story elevator. To begin with, we will explain the invention and appearance of the elevator, then the development of the elevator through history, and then we will delve deeper into the topic of relays in the implementation of this mechanism.

Image 1: Elevator

1.2 What is elevator?

The elevator is a sophisticated mechanical system designed to transport passengers and goods vertically between different levels or sections of a building. Passengers or cargo are transported within enclosed cabins that move along rigid vertical tracks. Elevators are typically housed in a dedicated shaft, which may be constructed from different materials. Each exit point of the elevator is secured with automatically locking doors.

Key components of an elevator system usually include some of three types of cabins: frame, self-supporting, or panoramic. The top of the cabin is equipped with "brake siphons," which are specialized safety devices. It also includes steel cables that connect the cabin to the elevator's drive mechanism. A winch located in the machine room that facilitates the movement of the elevator car up and down. Counterweights help balance the cabin during its movement within the shaft. Speed limiters are essential safety features. If the elevator exceeds its designated speed, the system will automatically stop. Then, guides, resembling railway tracks, along which the cabin and counterweights travel, etc.

2. Invention of the elevator

When we talk about modern buildings, climbing to any floor higher than the second floor would be almost unthinkable in today's time, all thanks to the invention of the elevator. Although there are various types of elevators based on their application in everyday life, we will take as an example those that were used in residential and other buildings to transport people and small loads. We could have a debate about how much this has taken away the benefits that walking brings and made us lazier, but we cannot deny the numerous advantages and benefits that this invention has brought, such as an easier and faster life since we do not have to waste time walking, easier access for the elderly and people with disabilities and transportation difficulties, then easier transfer of loads such as furniture and similar things in buildings, and many others. In addition to making everyday life easier, the invention of the elevator in architecture meant a new era because the construction of buildings with 100 or more floors was unthinkable before this invention.

2.1 History of this invention

As with most inventions that date back a long time, there are various versions of who invented the first elevator and when. According to one of the versions, the famous Russian mechanic Ivan Kulibin was the inventor of that "vehicle". According to another story, the first elevator appeared in France, in the courtyard of Louis XV. With his help, the French king ascended to the chambers of his mistress, which were located on the floor above. According to other sources, the first elevator was invented by Archimedes in the third century BC. The Roman architect Marcus Vitruvius wrote about it in his book. The design of this device was extremely simple: a simple rope and a rotating spindle.

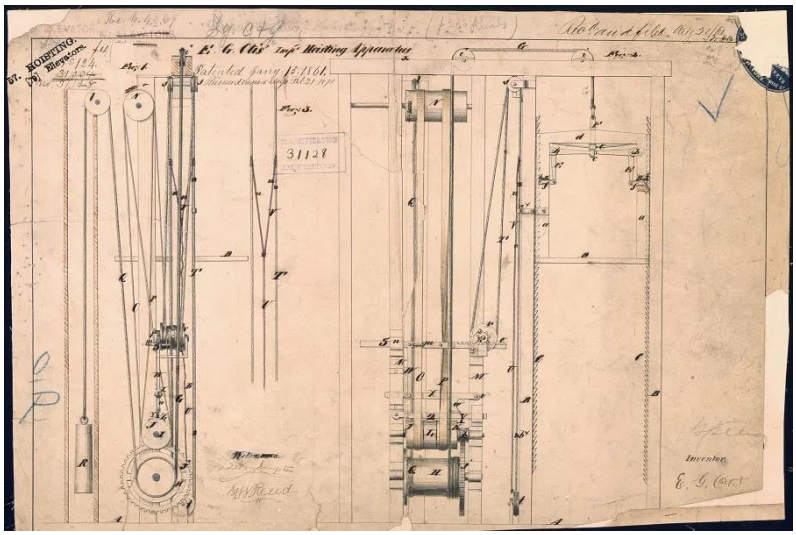

Image 2: Elisha Otis's elevator patent drawing

In the middle of the XIX Century American engineer Elish Graves Otis presented his invention. With this simple device, the elevator is automatically stopped in case of emergency and stored in the mine. The first elevator with such grippers was installed in New York in 1857. EG Otis is also the founder of Otis Elevator, which still exists today.

He focused on developing a key feature that would differentiate his invention from those that came before it—a safety brake. People were understandably afraid of riding in an elevator during this era because of the risks involved. He knew that if he wanted to gain the trust of the people who needed to benefit from his invention, it had to have a fail-safe system.

Elisha Otis' ingenious brake system used a set of spring-loaded arms that would activate if the elevator cable broke, halting the descent of the car and bringing it to a safe stop. This addition to the elevator mechanism is what transformed the invention from a rather risky and unsafe one into one that was used without fear by a large number of people whose daily lives would be unimaginable without it.

Following Elisha Otis' groundbreaking invention and the founding of the Otis Elevator Company in 1853, the company experienced significant growth and played a major role in shaping the elevator industry.

After Elisha Otis died, his legacy was continued by his sons, who were nicknamed the Otis brothers. They began to partner with other companies, thus expanding their field of interest from elevators to other mechanisms. The company became a champion in the development of escalators, moving walkways, and other transportation systems.

Under the leadership of the Otis brothers, the Otis Elevator Company expanded its business and continued to innovate. Interestingly, in 1889, the company installed elevators in the iconic Eiffel Tower in Paris, further cementing its reputation as a global leader in the elevator market.

By the early 20th century, Otis passenger elevators were installed in many of the world's most famous skyscrapers, such as the Empire State Building and the Chrysler Building in New York.

To this day, Otis has managed to maintain its status as a leader in the field in which it operates.

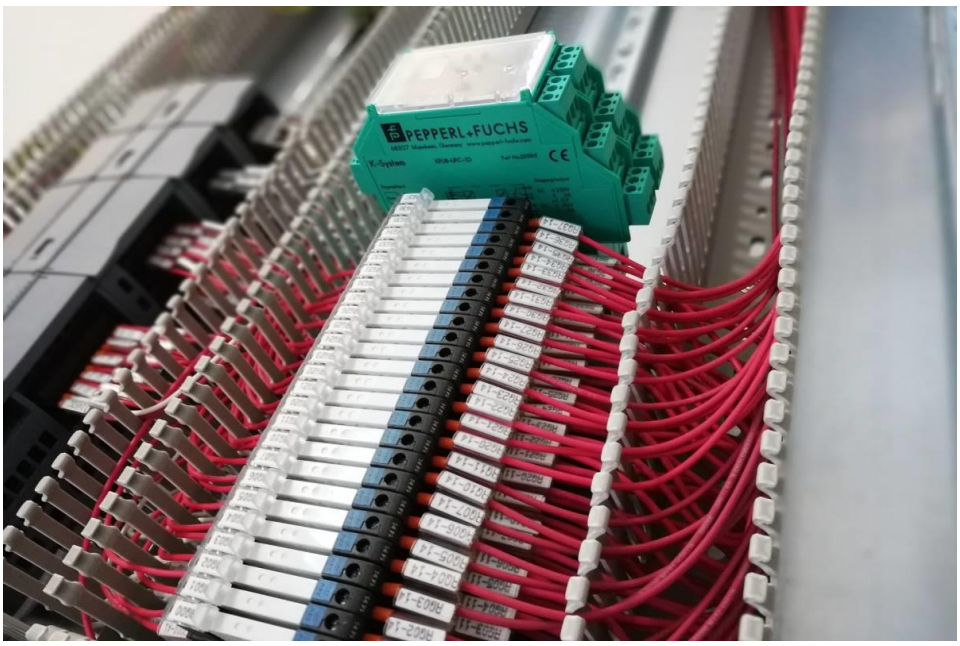

Image 3: Relay

3. Relays

Now that we have explained the basic components of the elevator hardware as well as the history of the invention of the elevator, we can move on to getting to know relays.

A relay is an electronic component that serves to redirect voltage from one part of the device to another. This is usually done by having a certain magnet, which is allowed to move at the appropriate moment when we press the switch.

This is made possible by coils or more often wires, which are attracted to electricity. The first such concept was created in 1840 and was used to start the telegraph.

The idea of starting, or rather switching energy and voltage, has made most devices include a relay. The price of the devices themselves is largely not noticeable, especially when you consider what they actually provide to the devices themselves.

Below we will talk about the part and types of relays and their applications.

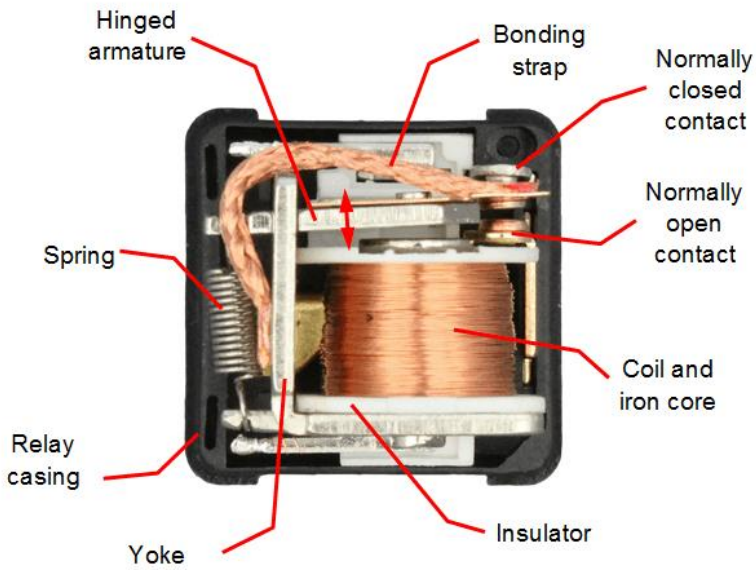

Image 4: Construction of a relay

3.1 Parts of relays

All relays, regardless of their type and application, must have some components such as a frame, armature, coil, contacts and switch.

They work by passing current through the first circuit through an electromagnet, creating an electromagnetic field and thus activating the second circuit. The characteristic on the basis of which this component has gained importance and become popular is precisely that it is such a simple and straightforward system, thus opening up a ton of possibilities for which we can use it by upgrading it.

3.2 Types of relays

Since it is very important to use the right relay when choosing for different circuits, a large number of relays have been developed and divided on different bases. In order to better understand the different types of relays, we will first explain the principle on which they are divided and only then move on to the different types.

3.2.1 Based on Poles and Throw

With relays, poles and throws refer to how one relay can fit into a larger system. The number of poles tells us how many different circuits one relay can switch, and the number of throws tells us how many output contacts it can actually switch.

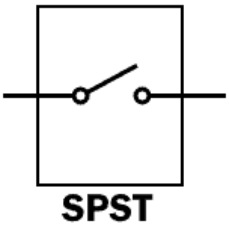

Image 5: Single pole single throw delay

Single pole single throw (SPST)

The single pole means that it can control only one circuit while the single throw means its pole has only one position in which it can conduct. This means that SPST relays two states.

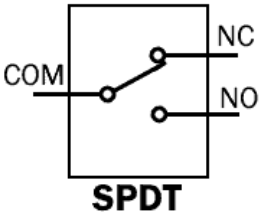

Image 6: Single pole double throw

Single pole double throw (SPDT)

The single pole means it can control only one circuit at a time. The double throw means its pole has two positions in which it can conduct.

The SPDT relay has two states and in each state, its one circuit remains closed while the other remains open and vice versa.

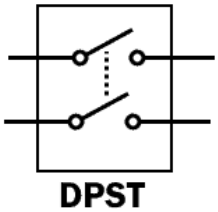

Image 7: Double pole single throw

Double pole single throw (DPST)

The double pole means it can control two completely isolated individual circuits. The single throw means that each pole has one position in which it can conduct. This means that DPST relay can switch two circuits simultaneously.

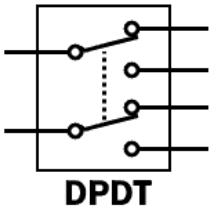

Image 8: Double pole double throw

Double pole double throw (DPDT)

The double pole means it can control two circuits while the double throw means each pole can conduct in two separate positions.

The DPDT relay can be interpreted as two SPDT relays but their switching is simultaneous. A relay can have as many as 12 poles.

3.2.2 Forms of relay

The division of relays into forms most often refers to the way they are made and how they control different electrical circuits. It is used to standardize different types of relays.

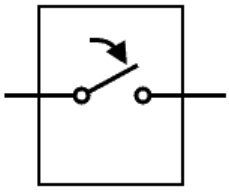

Image 9: "Form A" relay

“Form A” Relay

“Form A” is an SPST relay with normally open (NO) default state. It has NO terminal that connects the circuit when the relay is activated and disconnects the circuit when the relay deactivates.

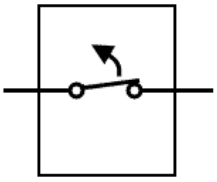

Image 10: "Form B" relay

“Form B” Relay

Form B relay is SPST relay with normally closed (NC) default state.

The NC terminal connects the circuit while the relay is inactive and it disconnects the circuit when the relay activates.

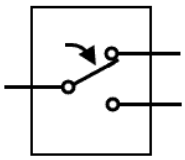

Image 11: "Form C" relay

“Form C” Relay

Form C relay is SPDT relay with double throw contact terminals known as NC and NO.

It controls two circuit i.e. one circuit remain open while the other remains closed. It is also known as “break-before-make” relay because it breaks open one circuit before closing the other circuit.

3.2.3 Based On Operation Principles

The classification of relays according to the principle of operation refers to the way the relay operates and how its contacts overlap, for example it helps us understand how the relay activates and deactivates circuits and in which applications it is used.

These following types of relays are classified based on their different operation principles.

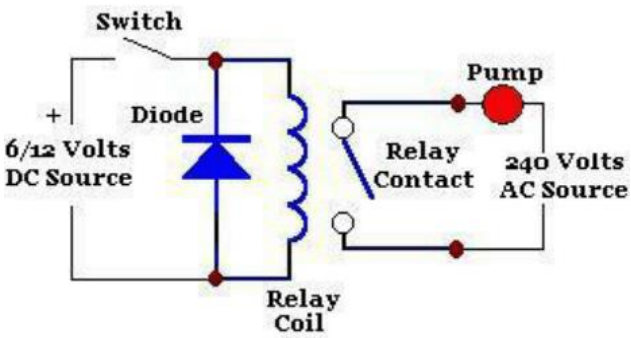

Image 12: Electromechanical relay

Electromechanical Relay (EMR)

This type of relay has an electromagnetic coil and a mechanical movable contact.

When the coil is energized it produces a magnetic field. This magnetic field attracts the armature (movable contact). When the coil is de-energized the coil loose magnetic field and a spring retract the armature to its normal position.

The polarity of the source in EMR relay does not matter, it energizes the coil in either way but if there is a back EMF diode installed then polarity should be considered.

The main disadvantage of EMR relay is that its contacts produce arc during breaking which leads to increasing its resistance over time and decreasing the lifespan of the relay.

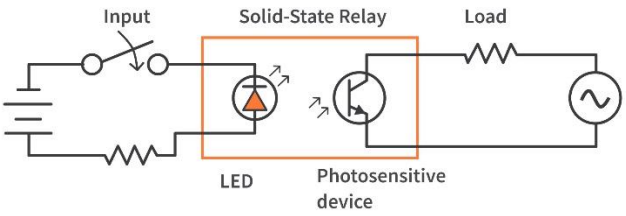

Image 13: Solid state relay

Solid State Relay (SSR)

SSR relay is made up of semiconductors instead of mechanical parts and it works on isolating the low voltage circuit from high voltage circuit using an optocoupler.

SSR operates on relatively high speed and has very low power consumption as compared to EMR relay. It has a longer lifespan because there are no physical contacts to burn out.

The main disadvantage of SSR relay is its nominal voltage drop across the semiconductor which wastes power in the form of heat.

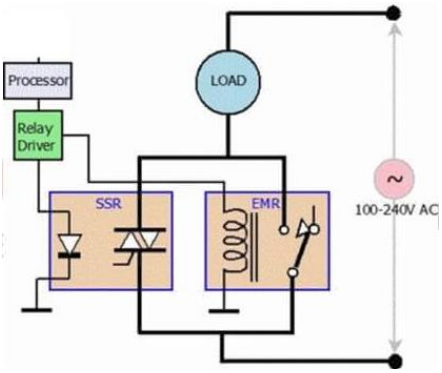

Image 14: Hybrid relay

Hybrid Relay

Hybrid relays are made using both SSR and EMR relays.

As we know that the SSR wastes power in form of heat and EMR has contact arcing problem. The hybrid relay uses both SSR and EMR to overcome their disadvantages.

In Hybrid relay, SSR and EMR are used in parallel. A relay control circuit is used for switching the SSR first. The SSR takes the load current. So it eliminates the arching problem. Then the control circuit energizes the EMR coil and its contact closes but there is no arching since the SSR is taking the load in parallel. After some time, when the EMR contact settles down, the control input of SSR is

removed. The EMR conducts the entire load current without any loss. Since there is no current flow throw SSR and the EMR takes the entire load, there is no power loss in form of heat. Thus, it eliminates the heat problem too.

There are many more divisions as well as types of relays, but we have listed the most important ones as well as the ones that are most widely used. Now that we have a basic understanding of relays, their uses and types, we can move on to the main part of this project.

4. Elevator logic implemented by relays

This has long been the basic way to control elevator systems. This logic was used before microcontroller computers became standard in automation in the early stages of automation, but it is still used today in some industiral systems.

The logic for a 4-floor elevator should include:

- Elevator call buttons on each floor, which send a signal to start the motor and the elevator to the desired floor.
- The motor starts when, as we have already mentioned, someone presses the arrival button, based on which the relay sends a signal to the motor whether to move the elevator up or down, depending on the current floor the elevator is on and which floor it needs to reach.
- The next element is the status indicators located on each floor, the simplest example of which can be an LED panel that starts to light up when the elevator is on your current floor.
- Then, safety switches that check whether the doors are closed and, based on this and similar analyses, take various measures, such as blocking the operation of the elevator until the doors are completely closed, etc.

4.1 Elevator control circuit

I found a simple circuit on the internet that uses relays to operate an elevator in a 4-story building. I will briefly explain how it works, then explain its main components and how to implement them using digital logic solutions.

In this section, I have broken down the circuits I found into simple elements to try to explain what each element does and ultimately explain how everything works as a whole.

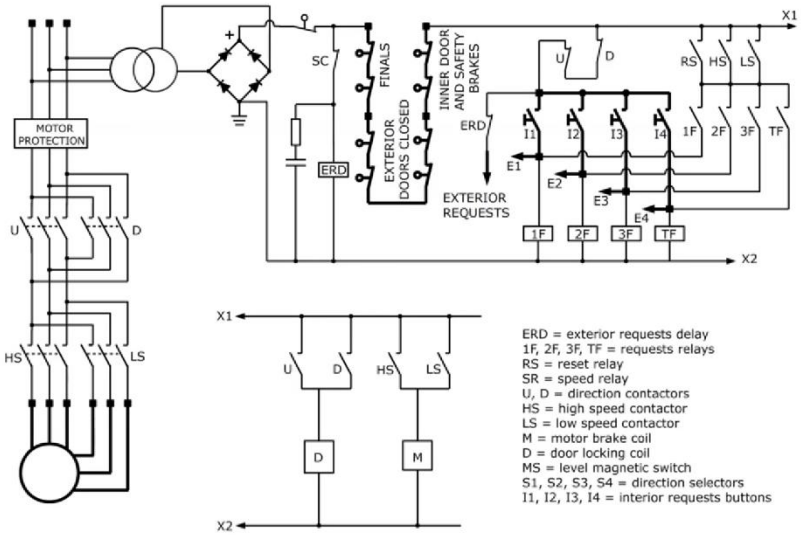

Image 15: Elevator - implementation using relays - part1

4.2 Key components

The motor (M) drives the elevator car while "Motor Protection" protects the motor from overload and short circuit. Direction contactors (U and D), contactor U allows up movement, while D allows down movement. They are connected to relays and the floor selection command. Speeds HS = High Speed and LS = Low Speed. Allows the elevator speed to change depending on the distance to the desired floor.

Locking and safety elements who are D = Door lock, which prevents the elevator from moving until the door is closed. MS = Magnetic switch that detects the floor level.

ERD = External button request delay, prevents simultaneous commands. Floor relays (1F, 2F, 3F, TF) which are activated based on the buttons pressed and determine where the elevator will stop.

.

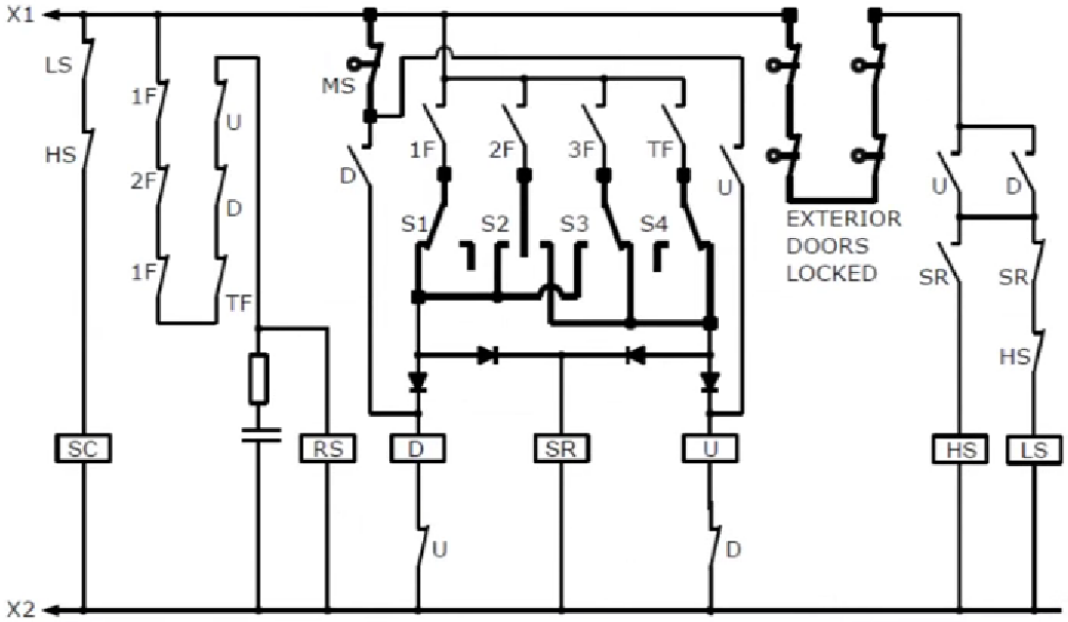

Image 16: Elevator implementation using relays - part2

This circuit have: RS (Reset relay) which is activated to reset a fault condition or error in the system.

D (Door lock) an electromagnetic lock that ensures that the elevator doors are closed before starting.

SR (Elevator speed) that controls the elevator speed and braking contactors. MS (Sensor switch) whuch detects when the elevator is at the correct floor level and allows the doors to open. Door locking system which enures that the elevator cannot start while the doors are open.

4.3 How does it work as a complete system

When the user presses a button on the floor (S1-S4) or in the elevator car (I1-I4), a request is generated for the elevator to move to a specific floor. This request activates the corresponding floor relay (1F, 2F, 3F, TF), which determines where the elevator should stop. Based on the current position of the car and the destination, the system selects the direction of the elevator movement - contactor U is activated if the elevator should move up, while contactor D is activated if the elevator should move down.

Before the elevator starts, key safety conditions are checked. The elevator doors must be completely closed and locked, which is confirmed by the signal from the door lock (D). Also, the error checking system (RS) must be in working order, which ensures that no malfunctions or irregularities have occurred in previous operation cycles. Only after all these conditions are met does the elevator receive a start signal.

If the selected floor is significantly distant from the current car position, the high speed contactor (HS) is activated, allowing the elevator to travel at maximum speed for efficiency. As the elevator approaches the target floor, the system reduces the speed by activating the low speed contactor (LS), ensuring a precise and safe stop.

When the elevator car reaches the desired floor, the magnetic switch (MS) is activated, which detects the exact position of the elevator. The motor stops and the system deactivates the travel relays. At the same time, the door locks are unlocked, allowing users to safely enter or exit the car. After passengers have boarded or disembarked, the cycle is repeated for the next request.

5. Simulating the operation of an elevator system with relays using digital logic

Although at first it seems like a very simple processing system, it is easier for us to see and analyze it if we show its components individually. Through the 4 basic functions of this system, I tried to show how the relays of this system work. The features I chose to show are request latching, direction control, motor and speed control and reset control. You will find out more about each below.

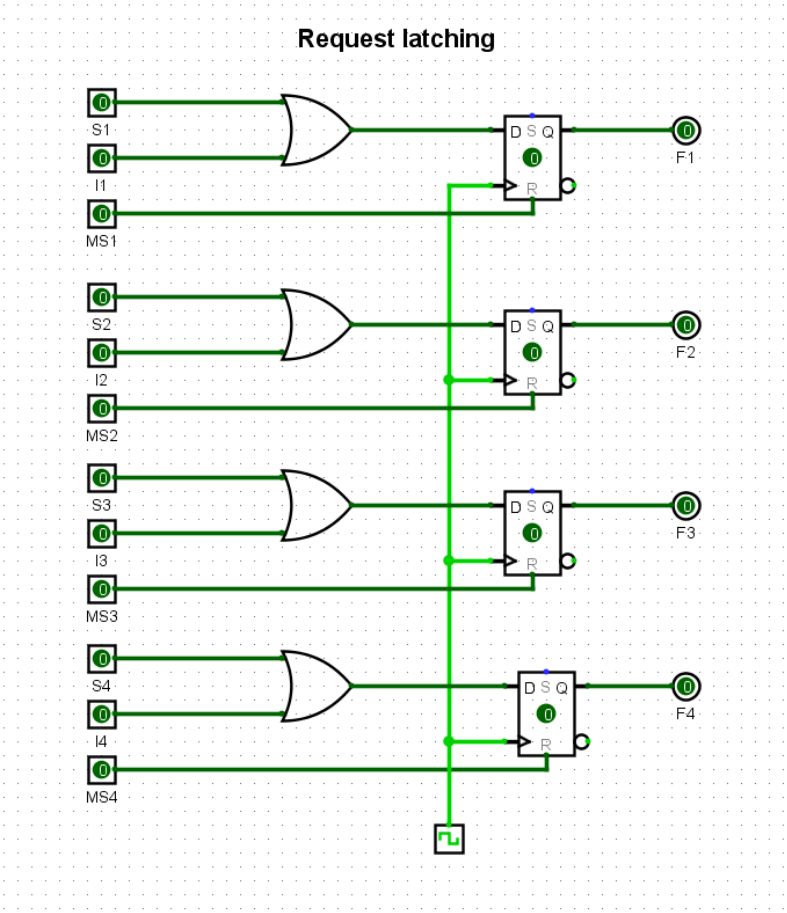

Image 17: Request latching

5.1 Request latching

In a classic relay system, when a passenger presses the elevator call button, current flows through the corresponding contact and activates the relay, which remains closed until the elevator reaches that floor. In the digital version of this system, we use D flip-flops, which function as memory elements and remember which floor the elevator called. Each floor has its own flip-flop, and the input signals come from buttons inside and outside the elevator car. We then combine these signals using OR gates, so that any request (internal or external) can activate the corresponding flip-flop. Once activated, the flip-flop remains in that state until the elevator reaches that floor. In an electro-mechanical system, when the elevator reaches a certain floor, magnetic sensors (MSx) detect its presence and close the contact that turns off the stored relay, clearing the request. In our version, we used only MSx input to start, but below you will see how we have improved the reset logic.

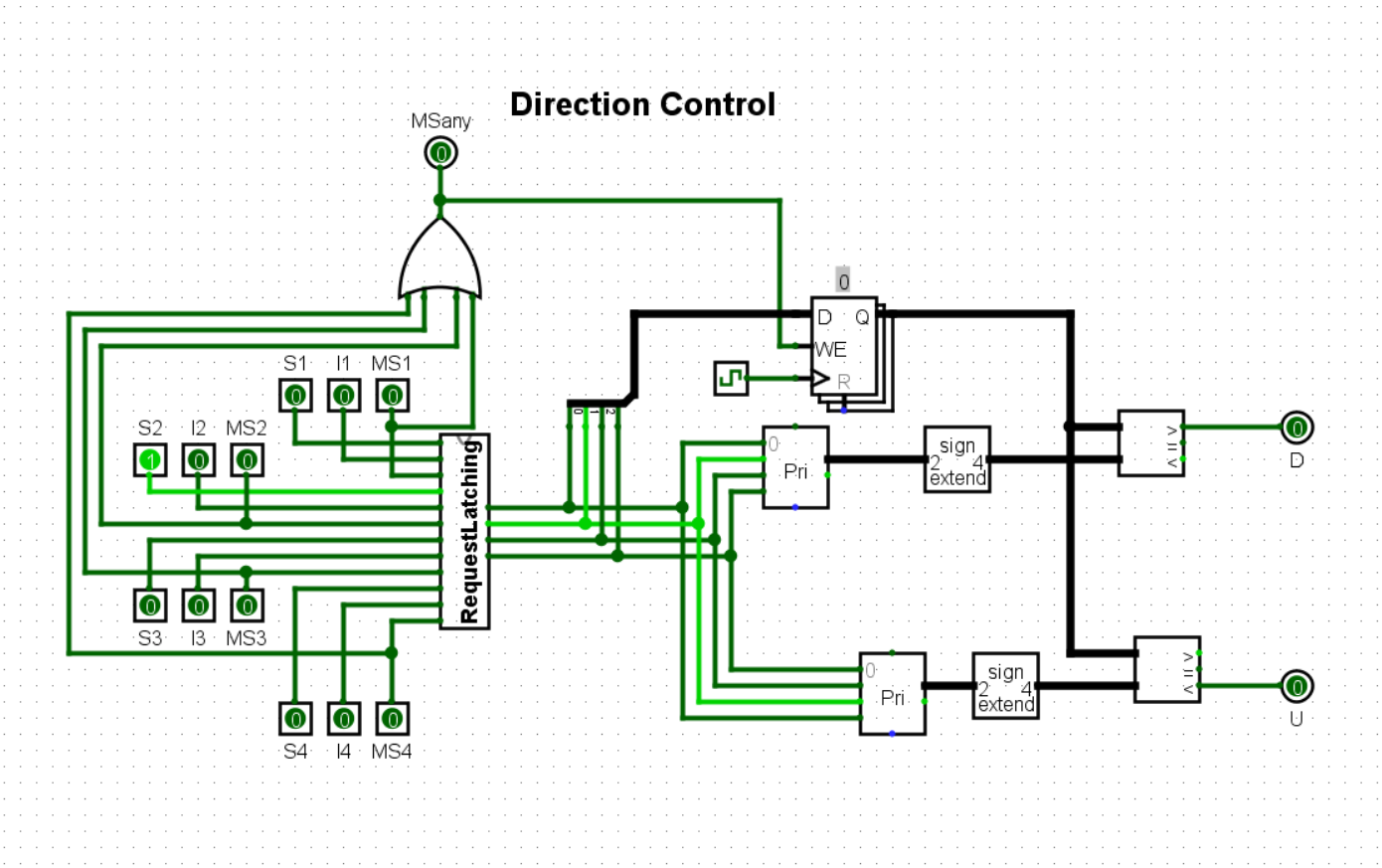

Image 18: Direction logic

5.2 Direction logic

In a relay system, elevator direction control is usually done by two main direction relays – one for up and one for down. These relays are activated based on the elevator call and the current position of the car. In the digital version, we use priority encoders, which analyze the stored requests and determine the highest and lowest active calls. After that, the encoder output goes through a zero extender, which expands the data to a 4-bit format so that we can compare it with the current elevator floor.

To decide which direction the elevator should go, we use two comparators. One comparator compares the current floor with the highest active request, while the other comparator compares the current floor with the lowest active request. If the current floor is lower than the highest request, the UP signal is activated (U = 1), while in the opposite situation the DOWN signal is activated (D = 1). In an electro-mechanical system, these signals would directly activate the corresponding direction relay (UP or DOWN), allowing current to flow through the motor in the desired direction.

In a relay system, the direction contactors are connected to the stored call relays and the relays that detect the current floor. This ensures that the elevator only moves when there is an active request, and when it reaches the appropriate floor, the relay contact is broken and the elevator stops. In the digital version, this functionality is achieved by using OR gates, which connect the outputs of the comparators and form the final control signals for the elevator motor.

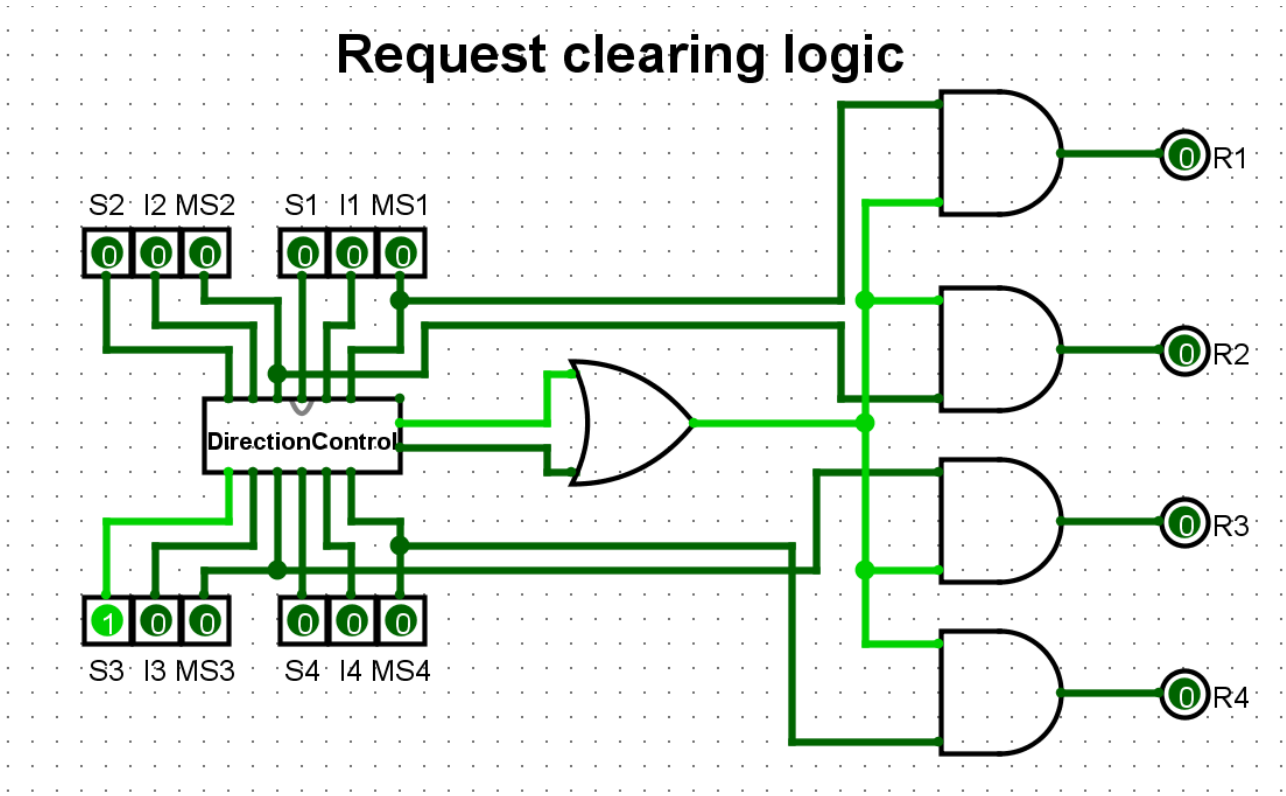

Image 19: Request clearing logic

5.3 Clearing logic

When we explained the operation of the first circuit, we mentioned that we would initially use only MSx to reset each D flip-flop, but here we extend this logic to include the possibility of resetting if it was in motion and only then arrived at the desired floor. In an electromechanical system, when the elevator arrives at a certain floor, the relays that stored the request must be deactivated so that the system can receive new calls. This effect is achieved by AND gates in the digital system, which connect the stored requests (Qx) with the signal from the magnetic sensors (MSx).

When the elevator arrives at the floor, the magnetic sensor (MSx) is activated and checks through the first AND gate whether the elevator is in motion (U + D = 1). If the elevator was in motion and has now stopped at the floor, the output of the AND gate (MS'_x) becomes active. This signal then enters the second AND gate, together with the stored request (Qx), which results in the activation of the reset (Rx) signal.

In an electro-mechanical system, the equivalent of this is a series of contacts that de-energize the request memory relays when the elevator stops at a certain floor. This ensures that the elevator is not left waiting when it has already fulfilled a request.

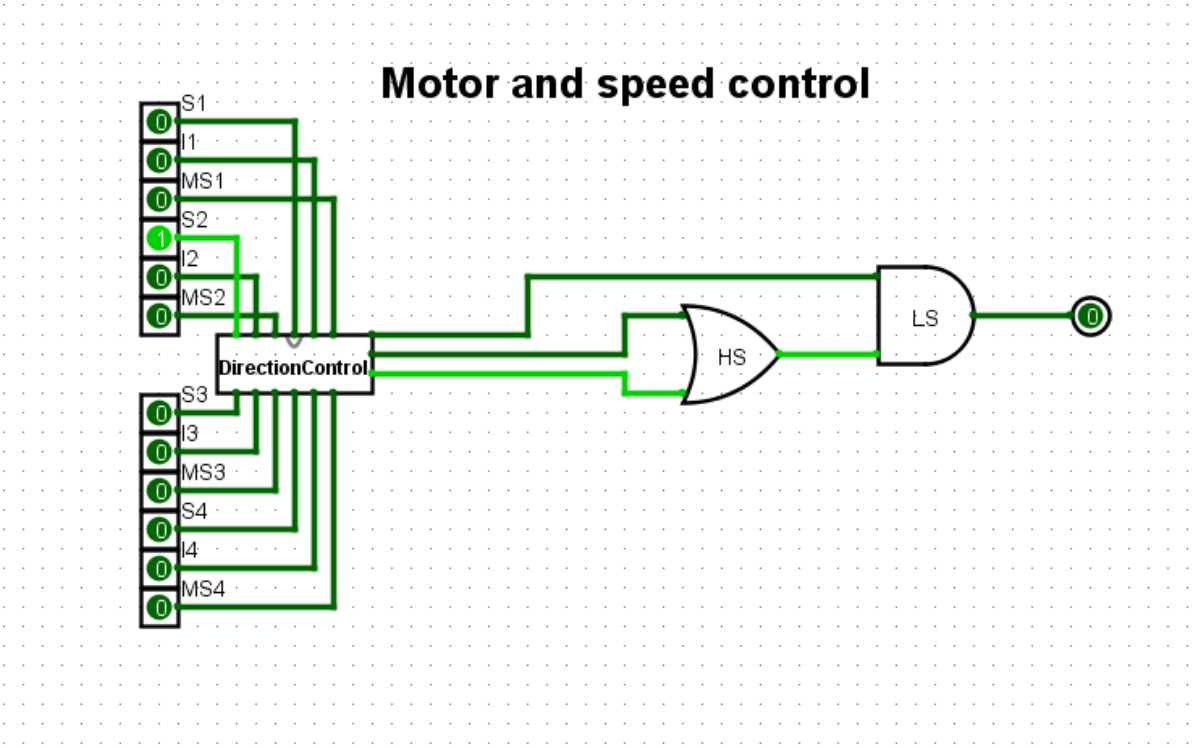

Image 20: Motor and speed control

5.4 Motor and speed control

In an electromechanical system, an elevator uses several relays and contactors to control the motor and its speed. When the elevator is far from the target floor, the motor runs at high speed (HS), while when approaching the floor, the motor switches to low speed (LS) to allow a smooth stop. This functionality is achieved in a digital system using AND and OR gates, which combine information about the direction of travel and the distance to the target floor.

High speed (HS) is activated when there is an active request and the elevator is not close to the target floor. Low speed (LS) is activated when the elevator is close to the target, ensuring a precise stop. In an electromechanical system, this effect is achieved using two separate contactors - one for full power and the other for reducing the motor voltage. A signal from the magnetic sensors (MSx) detects when the elevator is approaching the floor, activating the appropriate contactor to reduce the motor speed.

In the digital version, the signal from the magnetic sensor and the control logic enters AND gates, which determine when the LS (Low Speed) signal should be activated. These signals are then combined using an OR gate to form the final output for the motor, which can be displayed as an LED light or directly connected to the motor simulation in Logisim. In a practical application, the outputs would be used to drive relays that control the elevator motor.

6. Conclusion

In conclusion, each of these two implementation methods has its advantages and disadvantages, based on which we can conclude which method is better to use for which project. For this project, I would personally prefer to choose a digital system of logic circuits, because it is more familiar to me because I have already worked on a project in it. I believe that only by getting to know both of these implementation methods comprehensively, I could make a judgment about which is more acceptable.

Some of the advantages of digital logic are: lower energy consumption, higher operating speed, smaller physical size, greater reliability (no mechanical wear) and flexibility (easy changing of functionality).

While relays, since they work with high-voltage circuits, are more resistant to electromagnetic interference. Although it sounds like digital circuits provide many more benefits, relays, a somewhat outdated solution, still have their application today, especially in systems that are simple or industrial and require a high level of robustness.

By working on this report, I gained knowledge about the system with relays, which used to be the primary solution for many mechanisms, and the similarities with digital logic, which I was introduced to at the beginning of this academic year through the course Digital design. Of course, my knowledge on both of these topics is limited, but it has piqued my interest in deeper research, and I hope that I will have the opportunity to learn more about these systems in the future.

References

I used Chat GPT to explain some things that were unclear to me in implementing circuits using relays, and it helped me understand how some components work and how I can imitate their operation using digital logic circuits. Of course, this was just a basis that helped me understand what terms I need to search for and find out how they work.

Below I will list some sources that helped me understand how these mechanisms work, those articles whose parts of the text or main thesis I used to write some sections of this report.

https://hr.puntomarinero.com/what-is-a-lift-definition/

https://historycooperative.org/who-invented-the-elevator/

https://www.mikroprinc.com/sr/clanak/sta-su-releji-i-gde-ih-sve-mozete-koristiti

https://www.electricaltechnology.org/2018/12/what-is-relay-different-types-of-relays-its-operation-applications.html#google_vignette

Images:

https://images.bisnis.com/posts/2022/12/07/1606156/lift.jpg

https://tinyurl.com/bddu9pu3

https://tinyurl.com/54hd6ter

https://tinyurl.com/3a8ba9m7

https://www.electricaltechnology.org/wp-content/uploads/2018/12/SPST-Relay.png

https://www.electricaltechnology.org/2018/12/what-is-relay-different-types-of-relays-its-operation-applications.html#google_vignette

https://tinyurl.com/ydbwsb7u

https://tinyurl.com/ybr3tt96

Screenshots from: https://www.youtube.com/watch?v=jVmL2hbeOmY

The other pictures are my attempt to recreate the operation of the elevator system using relays in logisim-evolution using a digital logic circuit system.